Carbon Canister Modeling

Jon Brown
Staff Engineer
Exhaust Aftertreatment & Emissions
CLEERS Workshop 2017

GT Gamma Technologies

Agenda

- Carbon canister and EVAP system overview
- Motivation, Background, and Objective
- Adsorption isotherm
- Reaction Rate
- Model Results
- Conclusions

All information in this document is confidential and cannot be reproduced or transmitted without the express written permission of Gamma Technologies, LLC ©

Carbon Canister and EVAP System Overview

- The carbon canister is the center piece of the evaporative emission control system, referred to as EVAP for OBD2
- Adsorbs fuel vapor from fuel tank, and desorbs to the intake system when purged with air
- The hydrocarbon (HC) mass escaping the EVAP system is regulated → SHED test with diurnal temperature cycle [1]

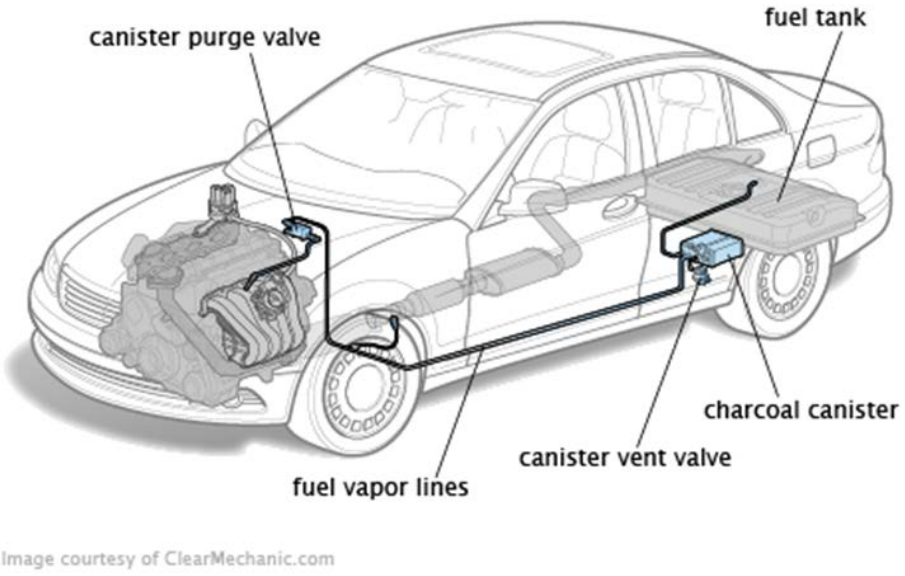

Image courtesy of ClearMechanic.com

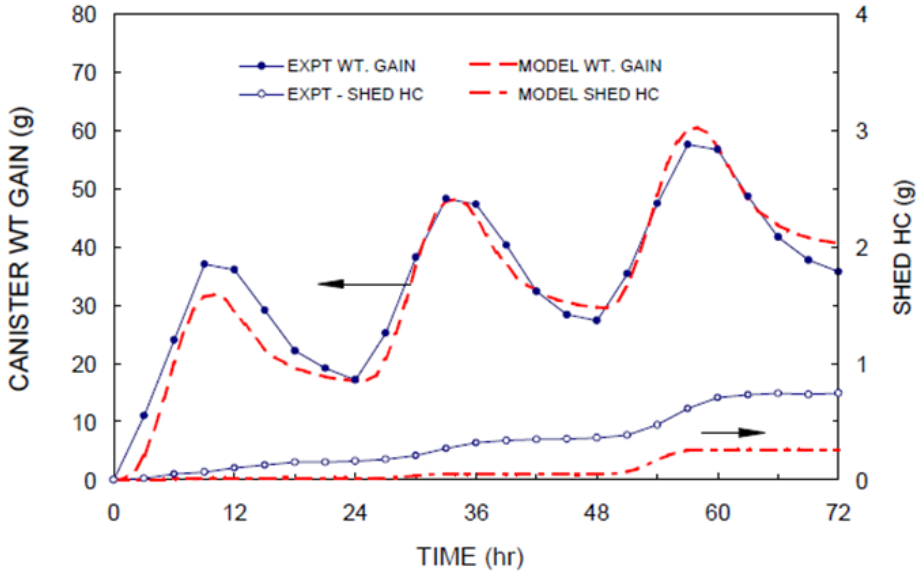

Reference for figure: "A Fuel Vapor Model (FVSMOD) for Evaporative Emissions System Design and Analysis," Lavoie, G., Imai, Y., Johnson, P., 1998, SAE 982644

All information in this document is confidential and cannot be reproduced or transmitted without the express written permission of Gamma Technologies, LLC ©

Motivation

- Many recent requests, despite being “old” technology
  - OEMs, suppliers, consultants, and universities
- Reasons
  - LEV III zero fuel-HC emissions vehicle test requirement [2]
  - More complex purge control system requirements for turbo-charged GDI engines [3], and design trade-offs for plug-in hybrid applications

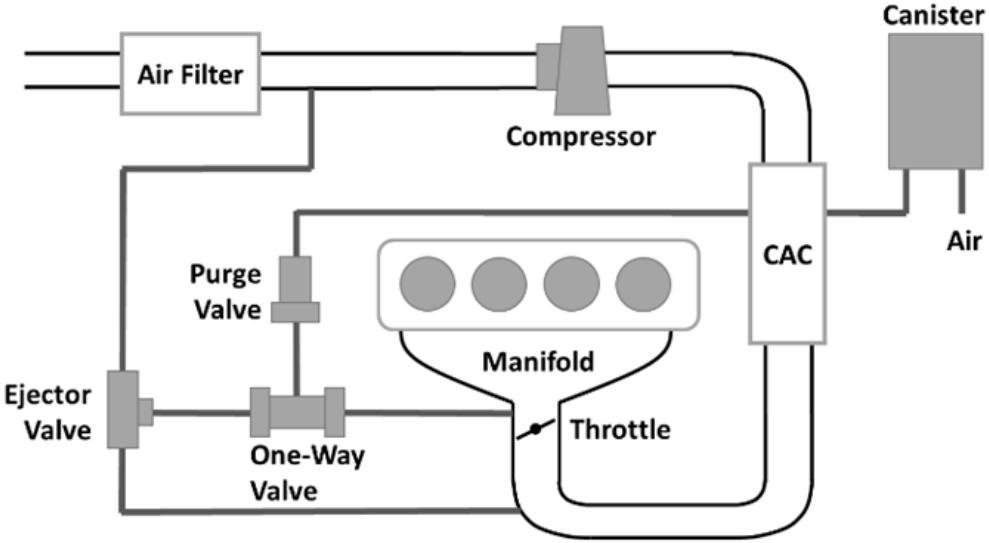

Figure 8: Dual-path EVAP system schematics.

Reference for figure: "EVAP System Fluid-Dynamics and Chemistry Modelling for EMS Purge Control Development and Optimization," Smith, L., Hussain, A., Pautasso, E., Servetto, E., Graziano, E., Brown, J., 2015, SIA Powertrain Conference.

All information in this document is confidential and cannot be reproduced or transmitted without the express written permission of Gamma Technologies, LLC ©

Background and Objective

- "Carbon Canister Modeling for Evaporative Emissions: Adsorption and Thermal Effects," Lavoie, G., Johnson, P., and Hood, J., 1996, SAE 961210. [4]
- Model and measurements, focused on equilibrium state, but we need kinetic rates, site density, etc.
- Others have used linear driving force models typically in 3D CFD [5,6,7]
- The objective was to use steady-state adsorption isotherm data to develop transient kinetics for a fast 1D, predictive, and adaptable model for different fuels and canister types
- Minimize the number of required calibration variables
- Standard aftertreatment modeling components in GT-SUITE

All information in this document is confidential and cannot be reproduced or transmitted without the express written permission of Gamma Technologies, LLC ©

Adsorption Isotherm

All information in this document is confidential and cannot be reproduced or transmitted without the express written permission of Gamma Technologies, LLC ©

Adsorption Isotherm

- Standard measurement → steady-state adsorption isotherm

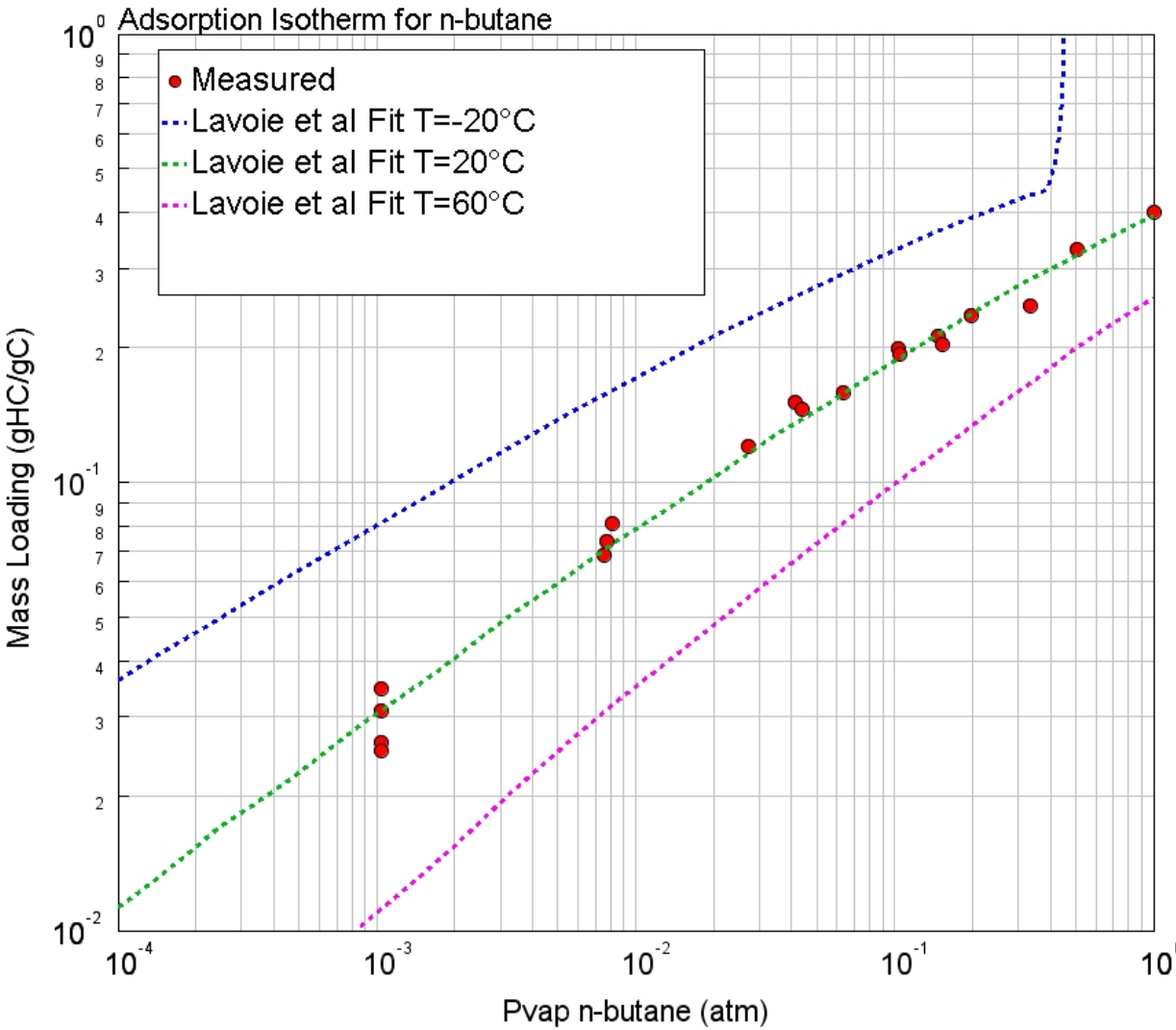

All information in this document is confidential and cannot be reproduced or transmitted without the express written permission of Gamma Technologies, LLC ©

Lavoie et al Adsorption Isotherm Fitting Function

- Relative adsorbed volume, *v*

$$v \equiv \frac{V}{V^*}$$

Equivalent to coverage

  - Where *V*=adsorbed volume, V^*=saturation volume

- Free energy of adsorption per unit liquid volume, *f*

$$f \equiv \frac{(\rho_L RT)}{W} \cdot \ln\left(\frac{p_{sat}}{p_{vap}}\right)$$

Function of temperature and concentration

  - Where ρ_L=liquid density, *R*=gas constant, *T*=temperature, *W*=molecular weight, p_{sat}=saturation pressure, p_{vap}=vapor pressure
  - Polanyi, Dubinin, et al type adsorption theory [4,8], similar approach to Pihl and Daw [9], but the fuel is assumed to adsorb as liquid

All information in this document is confidential and cannot be reproduced or transmitted without the express written permission of Gamma Technologies, LLC ©

Lavoie et al Adsorption Isotherm Fitting Function

- Lavoie et al re-plotted the adsorption isotherm data, and fit the data using two functions, one is relevant for expected range

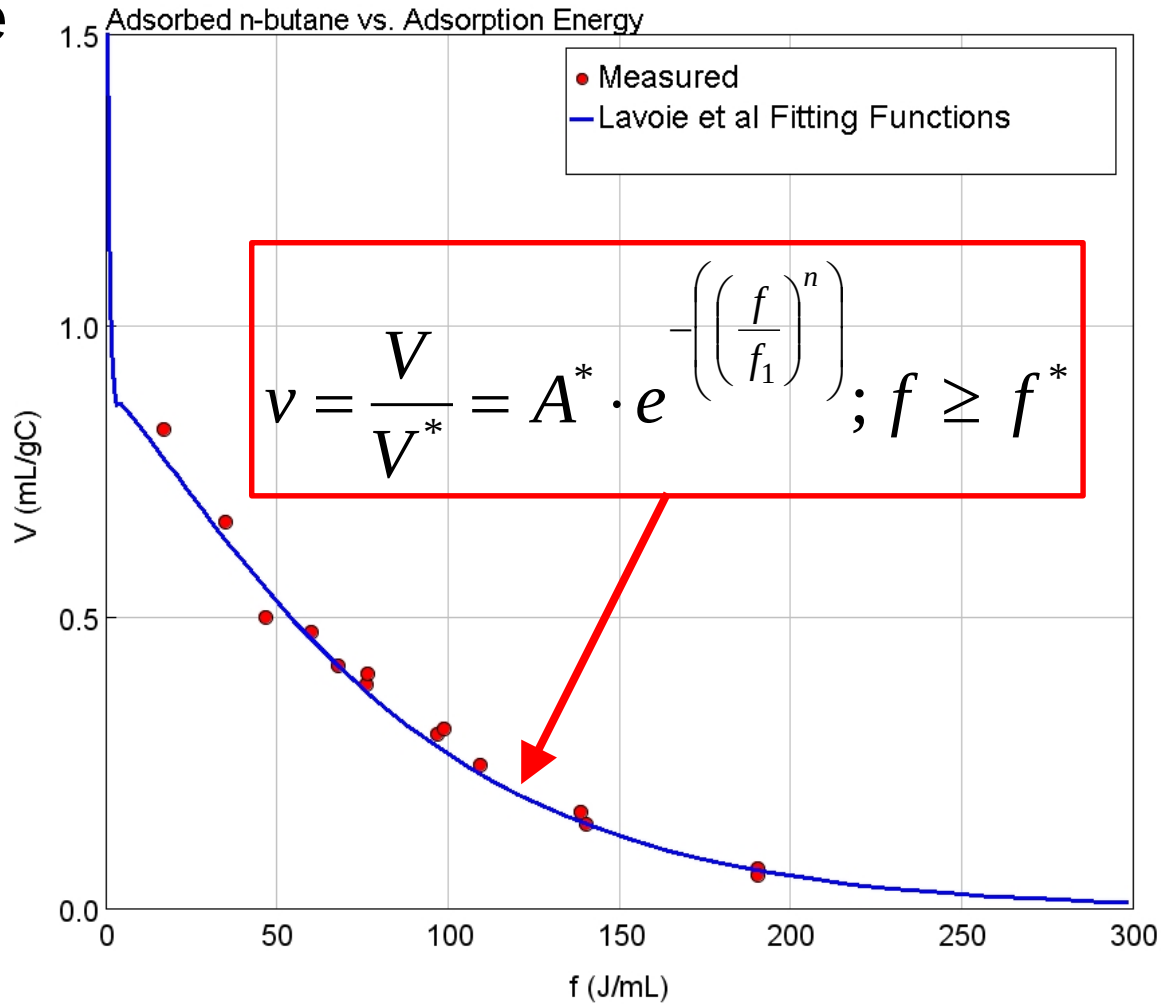

A^*=1.076
f_1=85 J/mL
f^*=4 J/mL
n=1.2
V^*=0.83 mL/gC
at T=20°C

All information in this document is confidential and cannot be reproduced or transmitted without the express written permission of Gamma Technologies, LLC ©

Reaction Rate

All information in this document is confidential and cannot be reproduced or transmitted without the express written permission of Gamma Technologies, LLC ©

Derive the Net Reaction Rate

- The goal is to derive a net rate *r* using transient forward and reverse rates in terms of coverage θ and reactant concentration $\{C\}$

$$r = r_a - r_d = r\left(\theta, \{C\}\right)$$

- The expected rate form at equilibrium:

$$r = r_a - r_d = k \cdot \left(\{C\} - \{C_{eq}\}\right) = 0$$

- Substitute *f* into the fitting function, replace *v* with θ, solve for p_{vap}, and convert p_{vap} to $\{C_{eq}\}$:

$$r = r_a - r_d = k \cdot \left(\{C\} - des_multi \cdot \left[\left(\frac{P_{sat}}{R \cdot T} \right) \cdot \left(e^{-\frac{f_1 \cdot W}{\rho_L \cdot R \cdot T} \cdot \left(-\ln\left(\frac{\theta}{A^*} \right) \right)^{1/n}} \right) \right] \right)$$

All information in this document is confidential and cannot be reproduced or transmitted without the express written permission of Gamma Technologies, LLC ©

Known and Unknown Variables

$$r = r_a - r_d = k \cdot \left(\{C\} - des_multi \cdot \left[\left(\frac{P_{sat}}{R \cdot T} \right) \cdot \left(e^{-\frac{f_1 \cdot W}{\rho_L \cdot R \cdot T} \cdot \left(-\ln\left(\frac{\theta}{A^*} \right) \right)^{1/n}} \right) \right] \right)$$

- Only 3 unknown variables to be calibrated:
  - *k* is an overall rate multiplier, units of 1/s
  - *des_multi* is a desorption multiplier, unit-less, near 1
  - Enthalpy of formation for the stored fuel coverage (h_{vap} + bond)
- Properties of the fuel are known:
  - *W*, ρ_L, and p_{sat} function of *T* from Antoine Equation
- Remaining are known from fitting the adsorption isotherm:
  - f_1, *A**, and *n* are adsorption isotherm fitting function parameters
  - Site density (mol/m^3), ρ_{app} = Apparent carbon bed density (gC/mL)

$$Site_Density = \frac{V^* \cdot \rho_{app} \cdot \rho_L}{W} = 2933 \frac{mol}{m^3}$$

All information in this document is confidential and cannot be reproduced or transmitted without the express written permission of Gamma Technologies, LLC ©

Carbon Canister Model Results

All information in this document is confidential and cannot be reproduced or transmitted without the express written permission of Gamma Technologies, LLC ©

Carbon Canister Model, Loading Tests

- 50/50, 20/80, and 10/90 mixtures by volume of n-butane C_4H_{10} with N_2

Experiment	50%	20%	10%
Avg. standard space velocity h^{-1}	31	78	156
Avg. RT Factor (<1 faster than RT)	0.03	0.03	0.02

Master dt=0.1 s

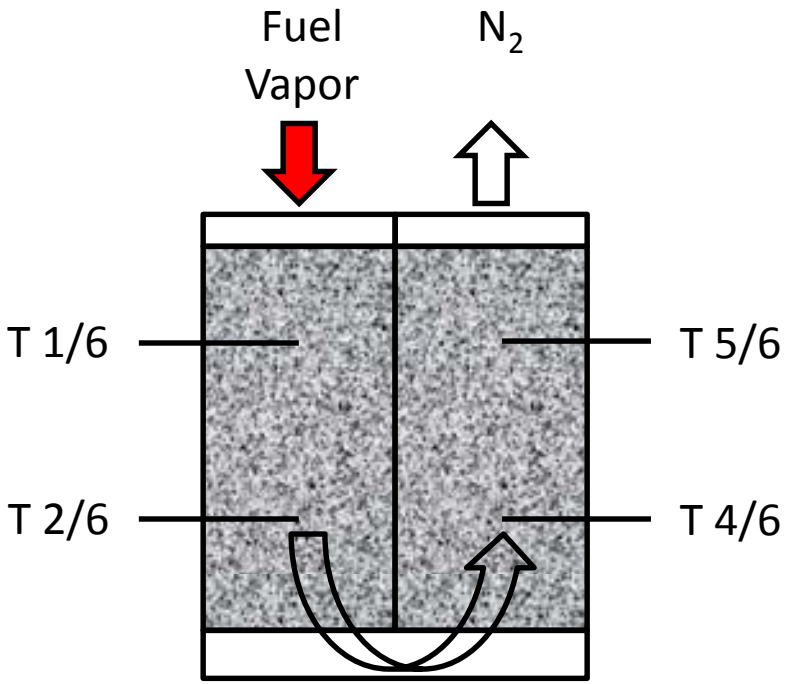

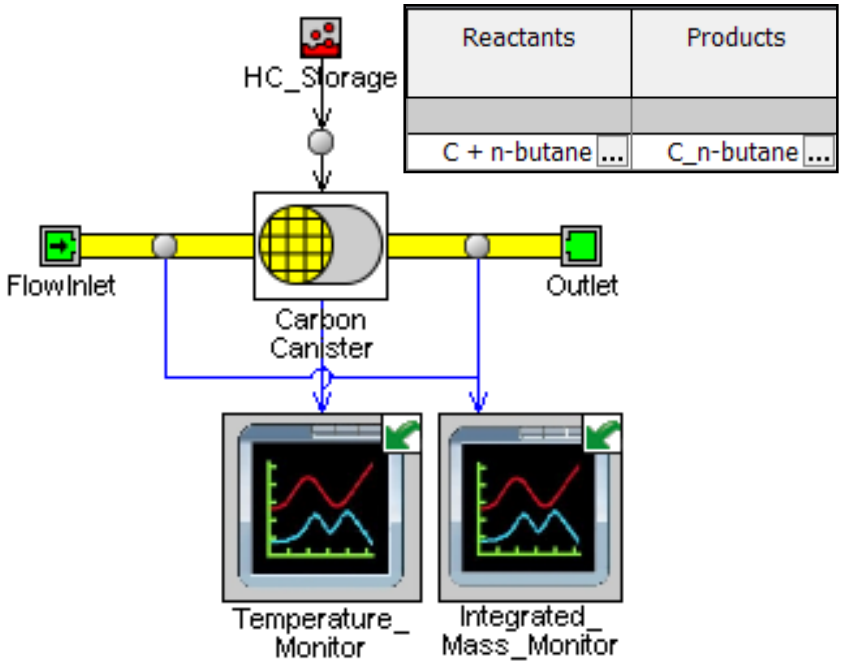

All information in this document is confidential and cannot be reproduced or transmitted without the express written permission of Gamma Technologies, LLC ©

Canister Loading vs. Time
Varied n-butane Inlet Concentration

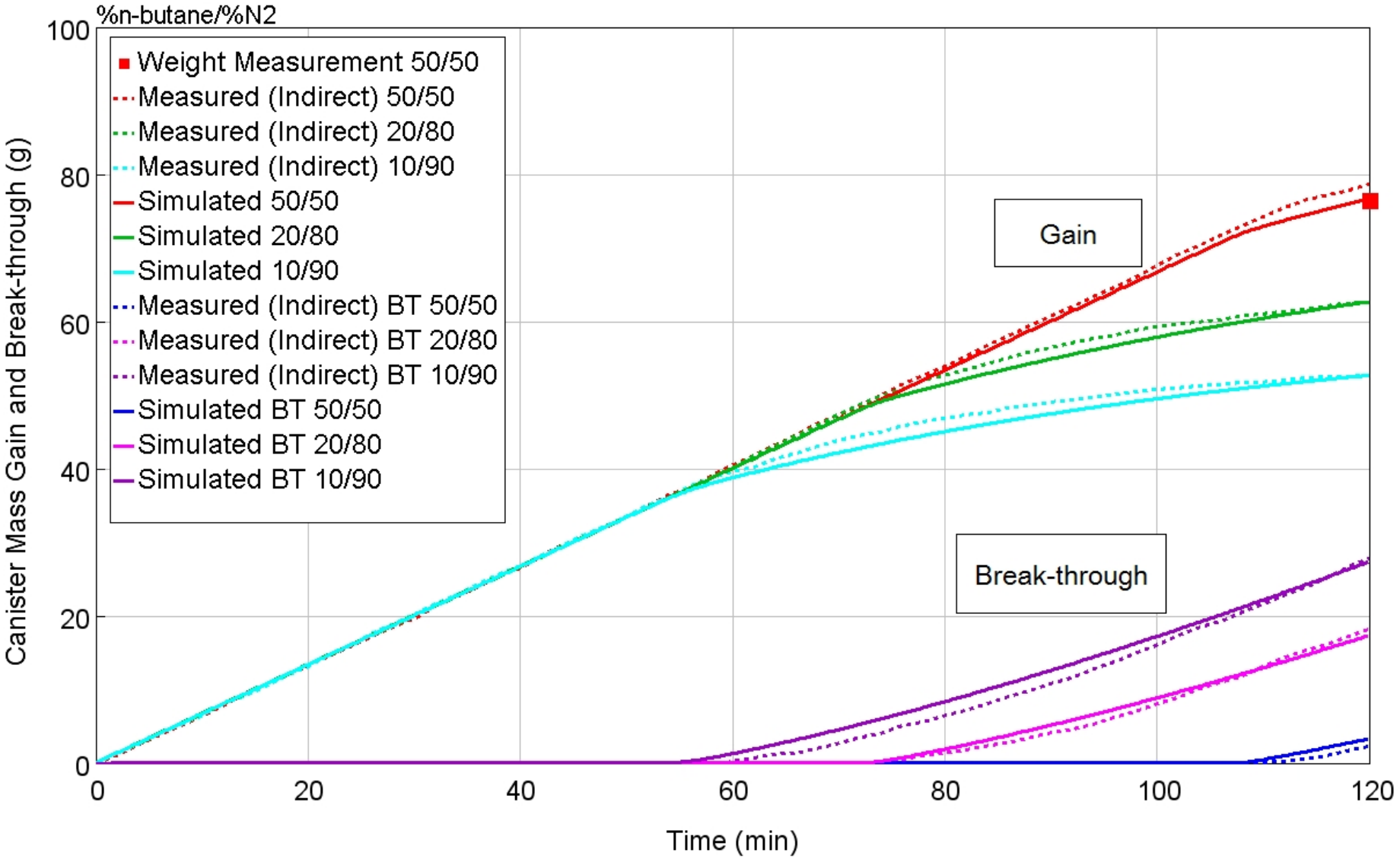

All information in this document is confidential and cannot be reproduced or transmitted without the express written permission of Gamma Technologies, LLC ©

Canister Loading vs. Axial Location
Comparison to Lavoie et al 1996, Loading 50/50

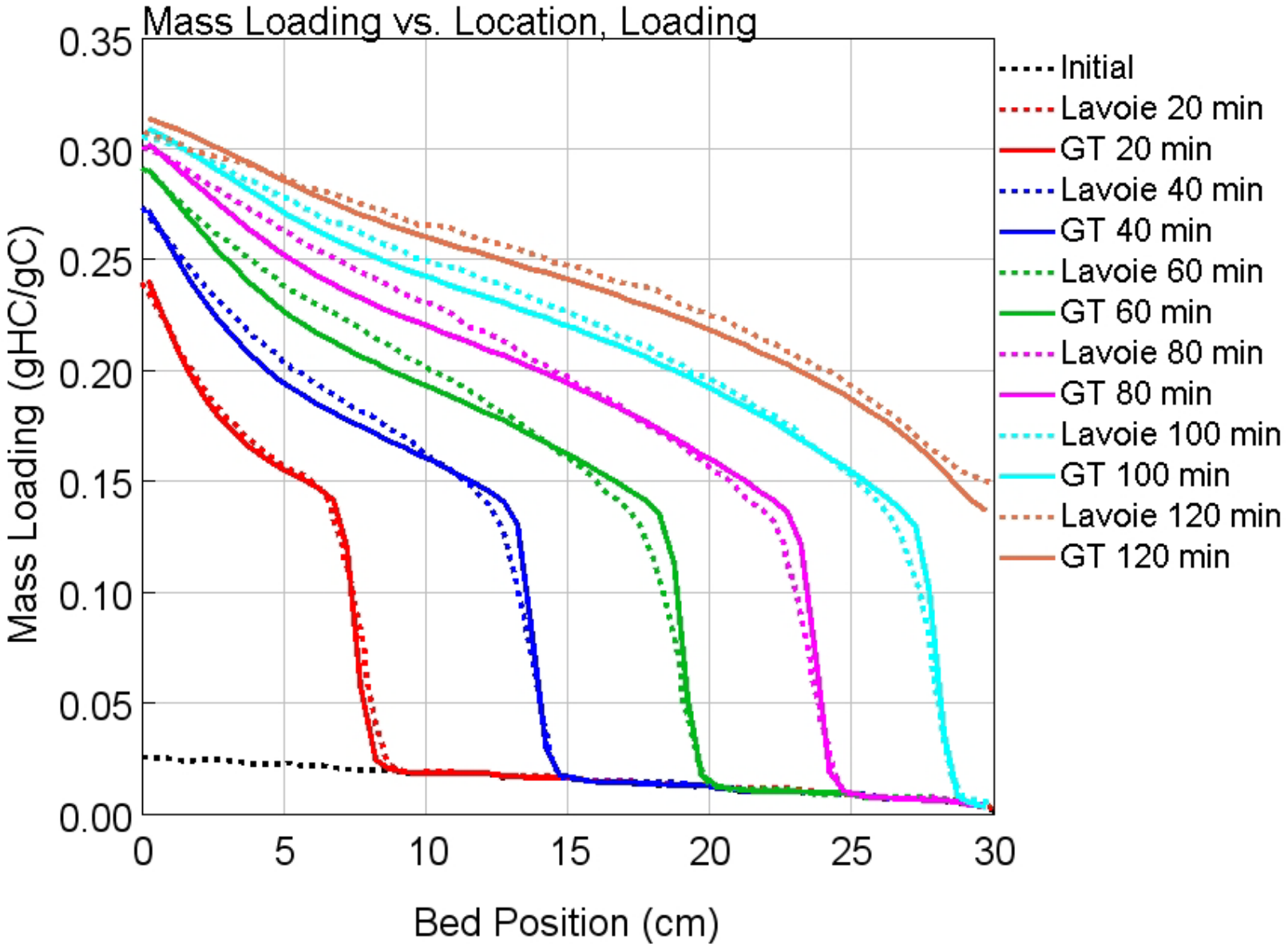

All information in this document is confidential and cannot be reproduced or transmitted without the express written permission of Gamma Technologies, LLC ©

Canister Bed Temperature vs. Time, Loading, 50/50

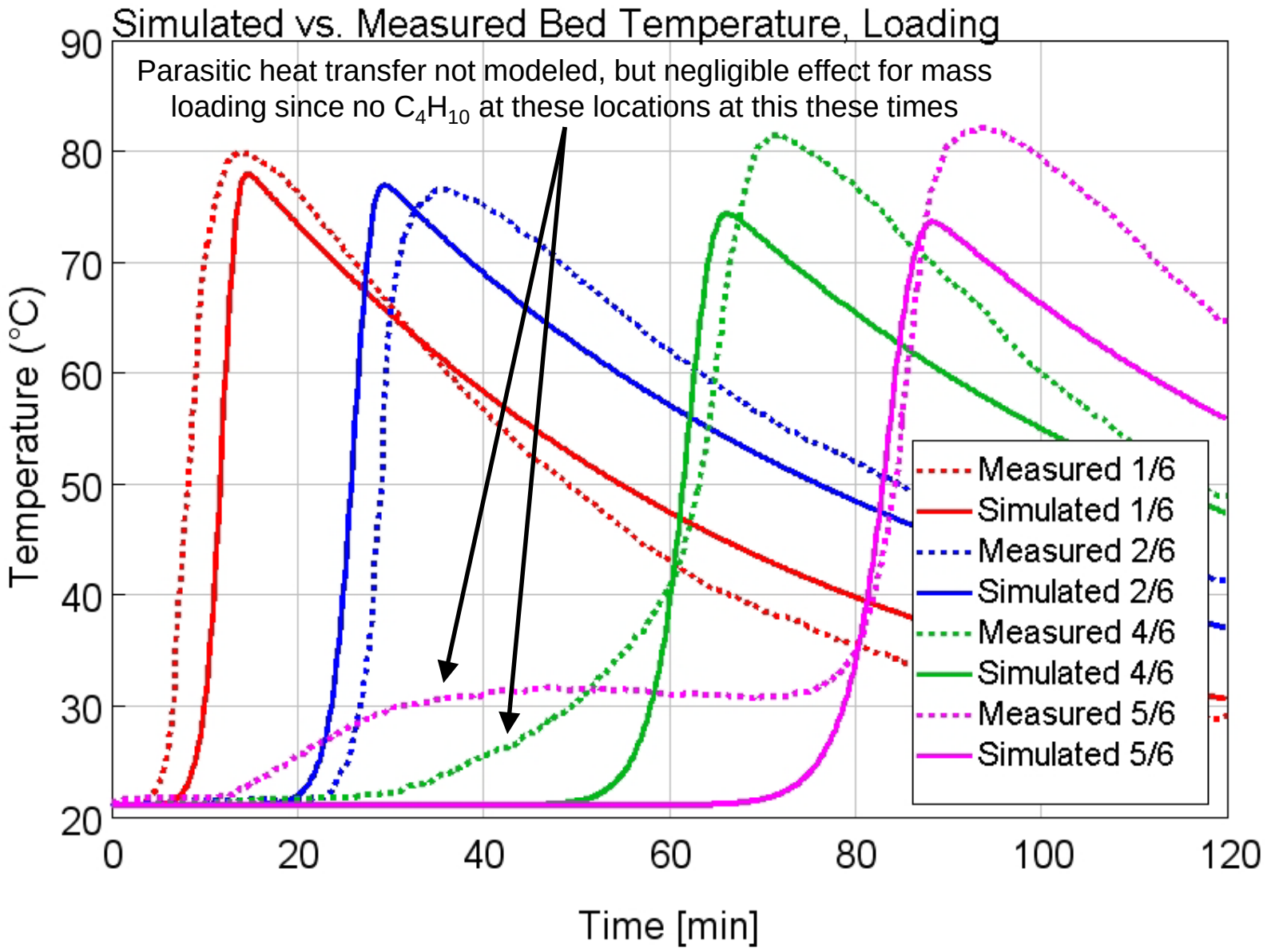

All information in this document is confidential and cannot be reproduced or transmitted without the express written permission of Gamma Technologies, LLC ©

Carbon Canister Model, Purging Tests

- N_2 at 10, 20, and 30 L/min purge flow rates

Experiment	10 L/min	20 L/min	30 L/min
Avg. standard space velocity h^{-1}	563	1133	1712
Avg. RT Factor (<1 faster than RT)	0.17	0.33	0.48

Master dt=0.01 s

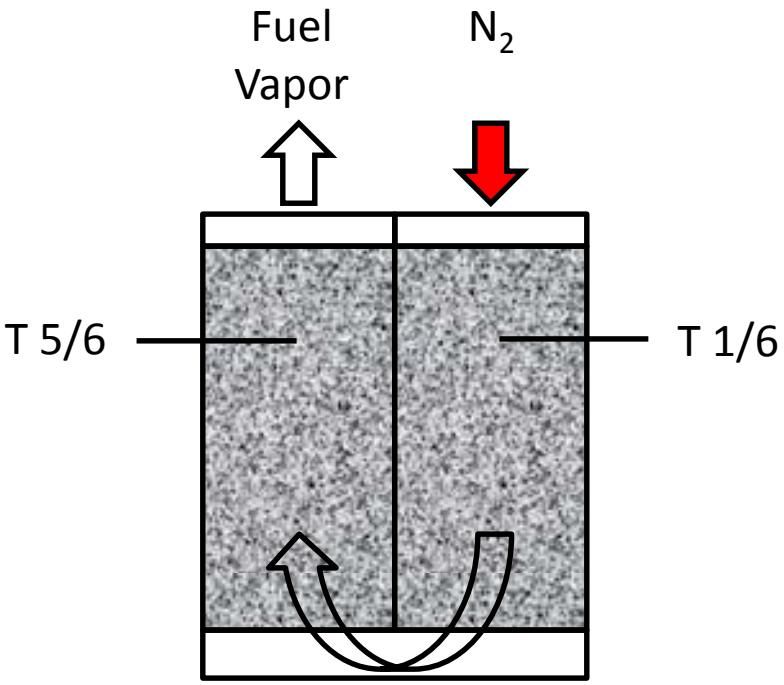

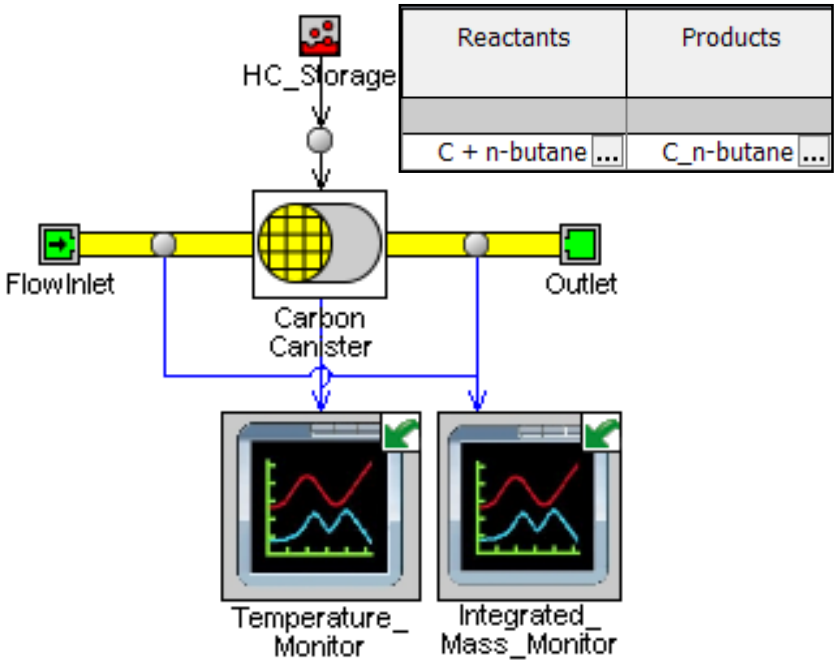

All information in this document is confidential and cannot be reproduced or transmitted without the express written permission of Gamma Technologies, LLC ©

Canister Purging vs. Time
Varied Purge Flow Rate

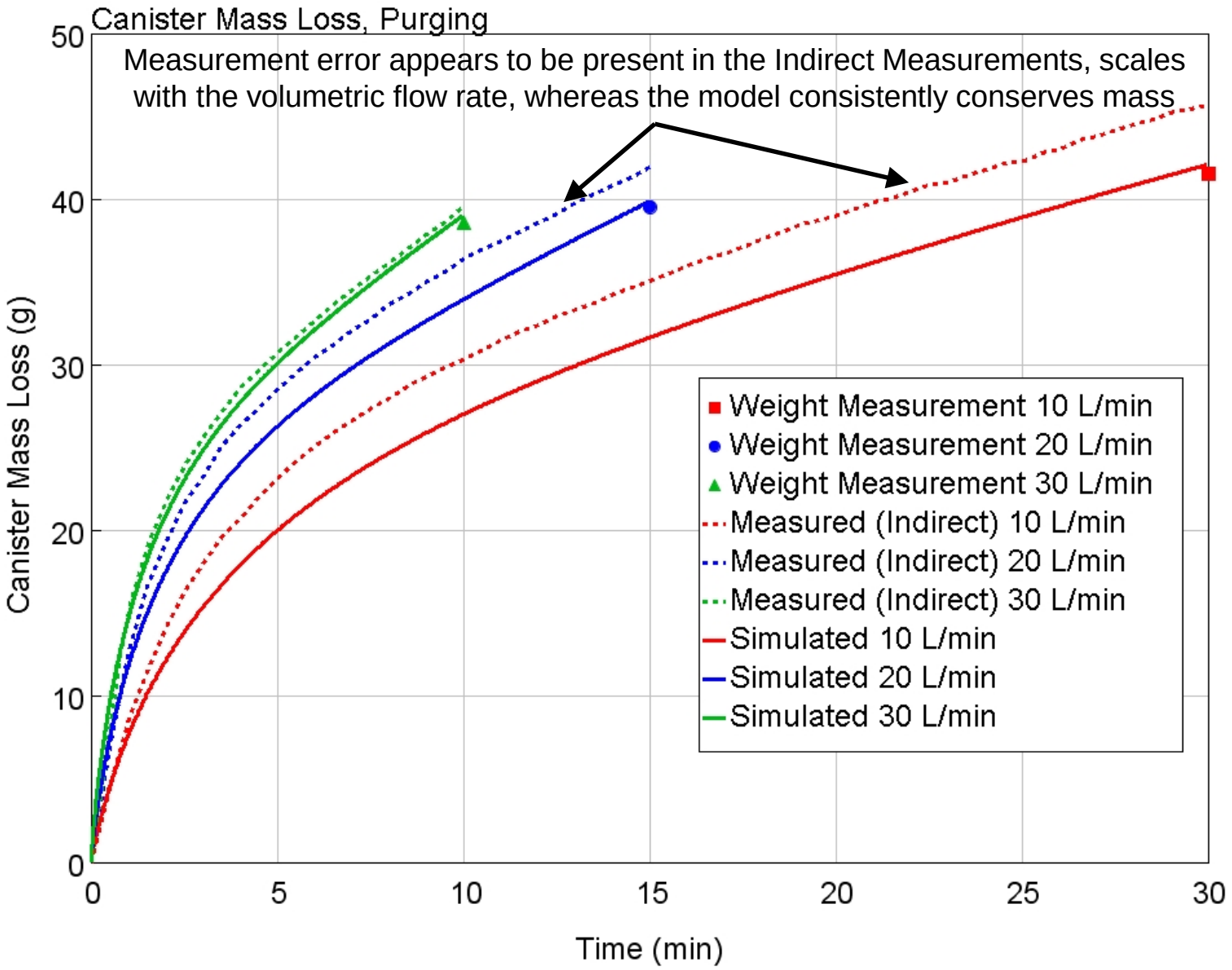

All information in this document is confidential and cannot be reproduced or transmitted without the express written permission of Gamma Technologies, LLC ©

Canister Purging vs. Axial Location
Comparison to Lavoie et al 1996, Purging 20 L/min

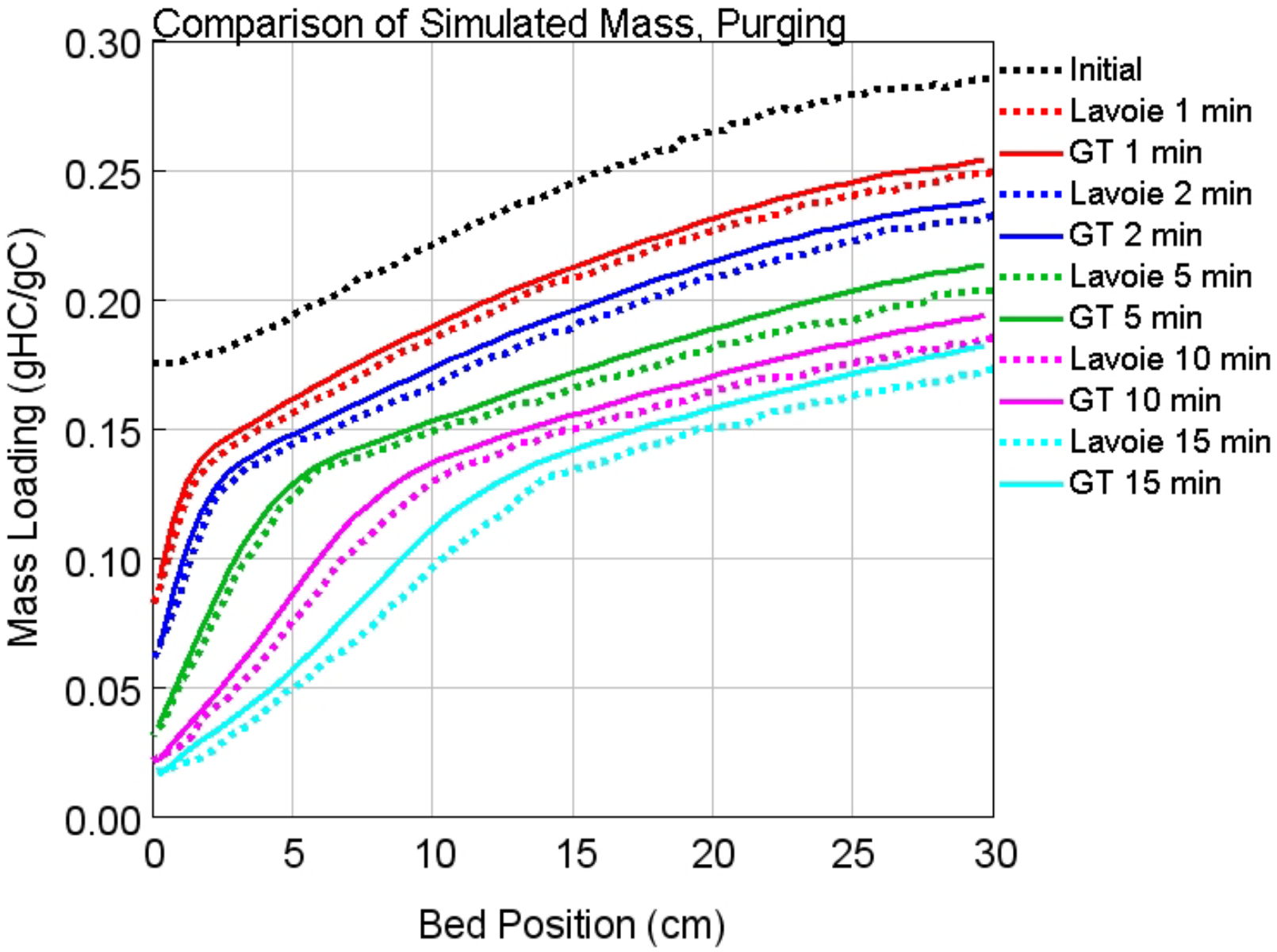

All information in this document is confidential and cannot be reproduced or transmitted without the express written permission of Gamma Technologies, LLC ©

Canister Bed Temperature vs. Time, Purging, 20 L/min

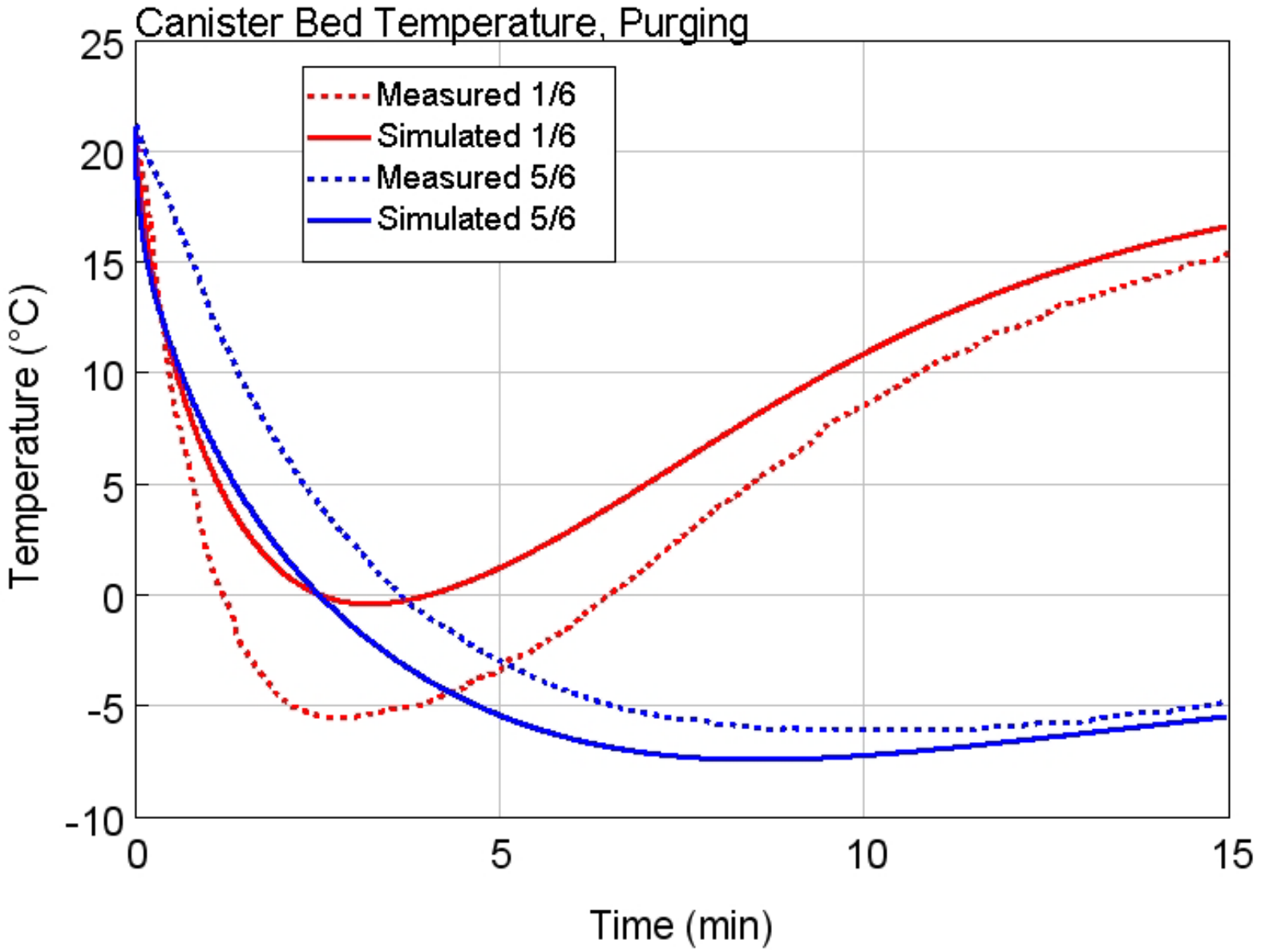

All information in this document is confidential and cannot be reproduced or transmitted without the express written permission of Gamma Technologies, LLC ©

Going Full Circle, Verification of Adsorption Isotherm

- Steady-state loading, great match at T=20°C

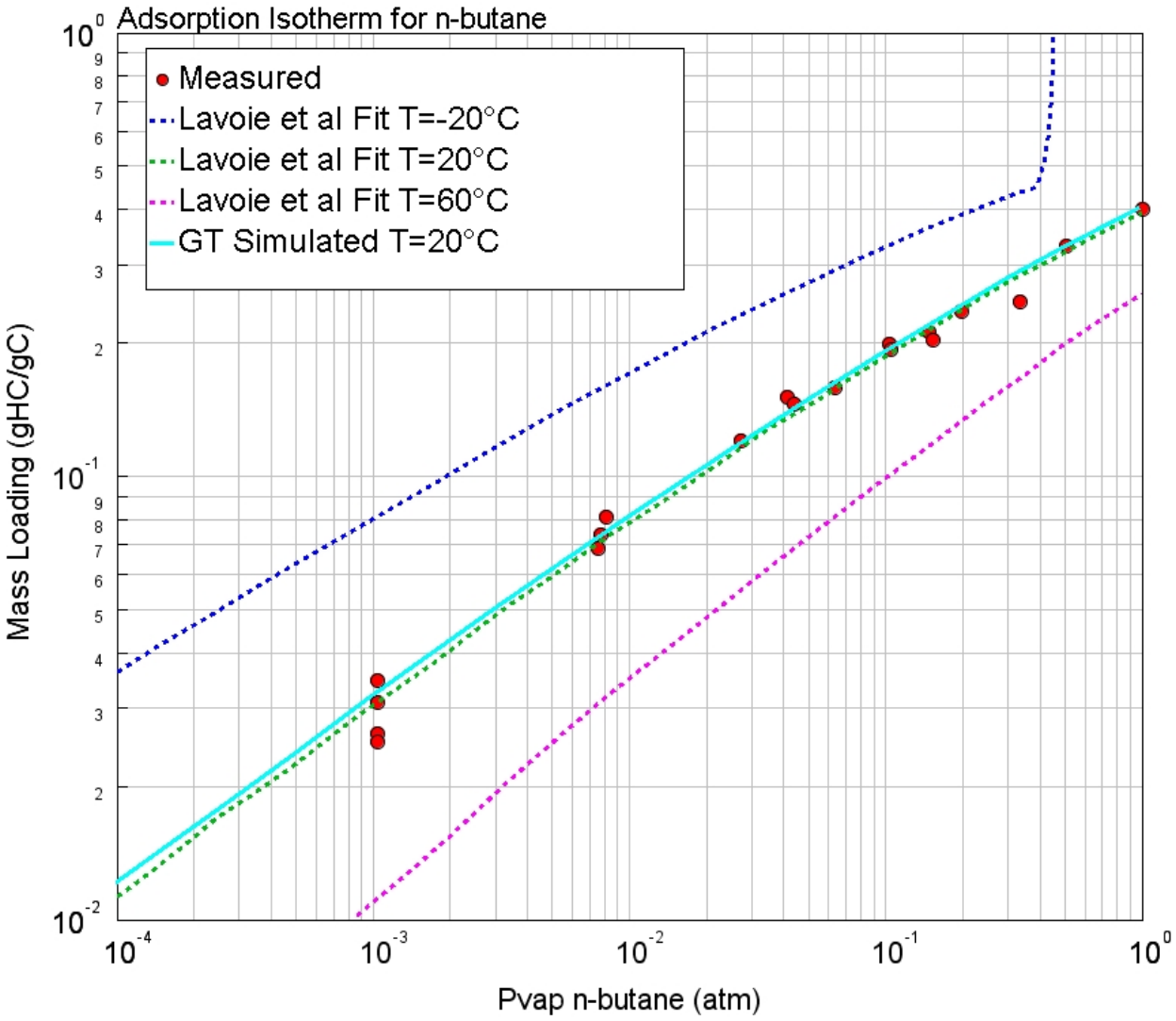

All information in this document is confidential and cannot be reproduced or transmitted without the express written permission of Gamma Technologies, LLC ©

Conclusions

- Developed a net reaction rate that characterizes the carbon canister behavior
- Successfully predicts the transient loading and purging of fuel vapor
- Successfully reproduces the steady-state adsorption isotherm
- Can be used to predict carbon canister working capacity, break-through mass, and for EVAP control system development
- Same approach can be used for other adsorption/ desorption devices → air intake system HC traps, water adsorption, fuel adsorption

All information in this document is confidential and cannot be reproduced or transmitted without the express written permission of Gamma Technologies, LLC ©

Acknowledgements

- Thomas Payet-Burin
  - Former intern at Gamma Technologies

- Ed Bissett

All information in this document is confidential and cannot be reproduced or transmitted without the express written permission of Gamma Technologies, LLC ©

References

- [1] “A Fuel Vapor Model (FVSMOD) for Evaporative Emissions System Design and Analysis,” Lavoie, G., Imai, Y., Johnson, P., 1998, SAE 982644.
- [2] ARB LEV III Attachment A-5: "CALIFORNIA EVAPORATIVE EMISSION STANDARDS AND TEST PROCEDURES FOR 2001 AND SUBSEQUENT MODEL MOTOR VEHICLES," 2012, https://www.arb.ca.gov/msprog/levprog/leviii/attacha5.pdf
- [3] "EVAP System Fluid-Dynamics and Chemistry Modelling for EMS Purge Control Development and Optimization," Smith, L., Hussain, A., Pautasso, E., Servetto, E., Graziano, E., Brown, J., 2015, SIA Powertrain Conference.
- [4] "Carbon Canister Modeling for Evaporative Emissions: Adsorption and Thermal Effects," Lavoie, G., Johnson, P., and Hood, J., 1996, SAE 961210.
- [5] "Modeling and Simulation of N-butane Adsorption/Desorption in a Carbon Canister," Bai, X., Isaac, K. M., Banerjee, R., Klein, D., Breig, W., and Oliver, L., 2004, SAE 2004-01-1680.
- [6] "Adsorption and Desorption Simulation of Carbon Canister Using n-Butane as Model Compound of Gasoline," Sato, K., Kobayashi, N., 2011, Journal of Japan Petroleum Institute, 54, (3), 136-145.
- [7] "Vehicular Emission Performance Simulation," Lin, J., Dong, M., Ali, S., Hipp, M., and Schnepper, C., 2012, SAE 2012-01-1059.
- [8] “Storage of Chemical Species in Emission Control Systems: The Role of Mathematical Modeling,” Koltsakis, G., Stamatelos, A., 2001, Global Powertrain Congress.
- [9] "NH3 Storage Isotherms: A Path Toward Better Models of NH3 Storage on Zeolite SCR Catalysts," Pihl, J., Daw, S., 2014, CLEERS Workshop.

All information in this document is confidential and cannot be reproduced or transmitted without the express written permission of Gamma Technologies, LLC ©

Questions?

All information in this document is confidential and cannot be reproduced or transmitted without the express written permission of Gamma Technologies, LLC ©

Additional Information

All information in this document is confidential and cannot be reproduced or transmitted without the express written permission of Gamma Technologies, LLC ©

Carbon Canister Model Information

- 1D Packed Bed Reactor Model
- Frontal Area=3330 mm^2
- Total Bed Length=300 mm
- Total Bed Volume=1 L
- Void Fraction=0.366
- Particle Diameter=0.677 mm
- C_f and Nu/Sh functions of $Re_{particle}$ from classical references
- dx=5 mm (60 sub-volumes)
- dt = 0.1 s loading /0.01 s purging
- Parasitic heat loss between chambers not modeled
- Flow rate too low for QS → Implicit solution with *d/dt* terms

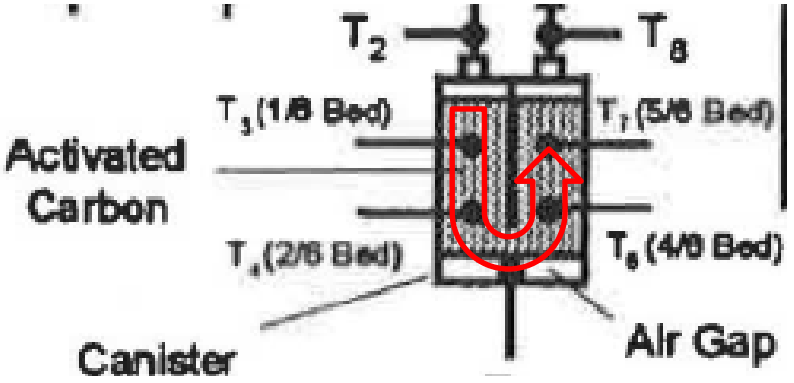

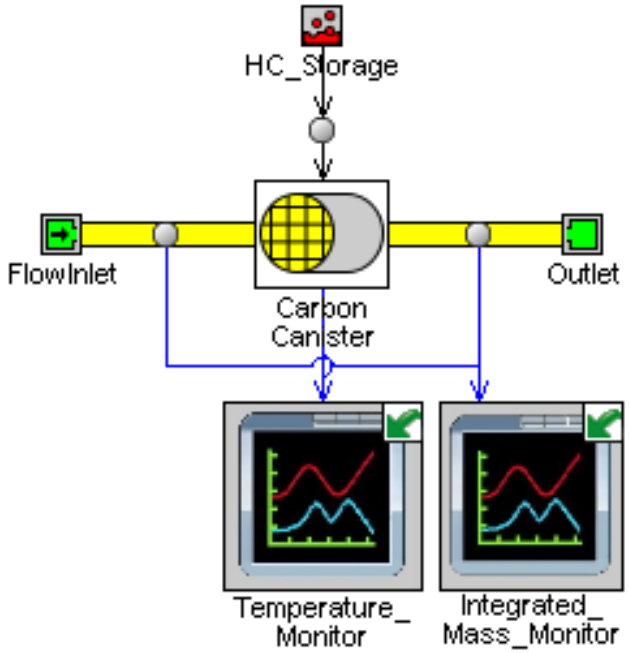

All information in this document is confidential and cannot be reproduced or transmitted without the express written permission of Gamma Technologies, LLC ©

Derive the Net Reaction Rate

- The goal is to have a net reaction rate *r* in terms of coverage θ and reactant concentration *{C}*

$$r = r_a - r_d = r\left(\theta, \{C\}\right)$$

- Only information available is isotherm data for a general equilibrium state *g*

$$g(v, p_{vap})$$

- At equilibrium the following must be true

$$r(\theta, \{C\}) = f(T) \cdot g(v, p_{vap}) = 0$$

All information in this document is confidential and cannot be reproduced or transmitted without the express written permission of Gamma Technologies, LLC ©

Derive the Net Reaction Rate

- Rearranging *v(f)* → *f(v)* and setting equal to the original adsorption energy term *f*

$$f_1 \cdot \left(\ln\left(\frac{A^*}{v} \right) \right)^{1/n} = \frac{(\rho_L RT)}{W} \cdot \ln\left(\frac{p_{sat}}{p_{vap}} \right)$$

- Single adsorbing species, fuel vapor

$$p_{vap} = \{C\}RT$$

- Solving for the equilibrium concentration

$$\{C_{eq}\} = \frac{p_{sat}}{RT} e^{-\left(\frac{f_1 W}{\rho_L RT} \right) \cdot \left(\ln\left(\frac{A^*}{v} \right) \right)^{1/n}}$$

All information in this document is confidential and cannot be reproduced or transmitted without the express written permission of Gamma Technologies, LLC ©

Derive the Net Reaction Rate

- The expected rate form is:

$$r = r_a - r_d = k \cdot \left(\{C\} - \{C_{eq}\} \right) = 0$$

- Plug in $\{C_{eq}\}$
- Replace v with θ (introduce desorption multiplier term)
- Mathematically flip ln() term for protection if $\theta \rightarrow 0$
- Final form:

$$r = r_a - r_d = k \cdot \left(\{C\} - des_multi \cdot \left[\left(\frac{P_{sat}}{R \cdot T} \right) \cdot \left(e^{-\frac{f_1 \cdot W}{\rho_L \cdot R \cdot T} \cdot \left(-\ln\left(\frac{\theta}{A^*} \right) \right)^{1/n}} \right) \right] \right)$$

All information in this document is confidential and cannot be reproduced or transmitted without the express written permission of Gamma Technologies, LLC ©

Reaction Rate Parameters and Constants

- Calibrated inputs, and calculated site density
  - For turnover rate in 1/s, multiply site density by rate_multiplier

site_density	mol/m^3	Calculated from Vo=0.83 mLHC/gC from Lavoie et al 1996 to be 2933 mol/m^3, ...	2933 ...
rate_multiplier		Rate Multiplier (m^3 reactor/mol/s), calibrated	0.02708245 ...
desorption_multiplier		Desorption Multiplier (no unit), calibrated	1.548817 ...
enthalpy_of_formation	J/mol	Enthalpy of Formation of stored n-butane for heat released/absorbed, calibrated	-162000 ...

- Fuel properties and adsorption fitting function parameters

A		Antoine Equation Coefficient A for T in K and Psat in mmHg	6.831 ...
B		Antoine Equation Coefficient B for T in K and Psat in mmHg	945.9 ...
C		Antoine Equation Coefficient C for T in K and Psat in mmHg	33.15 ...
R		Universal Gas Constant 8.314 J/mol/K	8.314 ...
W		Fuel molecular weight (g/mol), n-butane 58.12 g/mol	58.12
rhoL		Fuel liquid density (g/mL), n-butane 595.32 kg/m^3, 0.59532 g/mL...	0.59532 ...
f1		Adsorption Isotherm fitting constant f1=85 (J/mL)	85 ...
Astar		Adsorption Isotherm fitting constant A*=1.076	1.076 ...
n		Adsorption Isotherm fitting constant n=1.2	1.2 ...

Reference for the constants are from [4]: “Carbon Canister Modeling for Evaporative Emissions: Adsorption and Thermal Effects,“ Lavoie, G., Johnson, P., Hood, J., 1996, SAE 961210.

All information in this document is confidential and cannot be reproduced or transmitted without the express written permission of Gamma Technologies, LLC ©